VELUX Positions and Installation

To be used in conjunction with Velux EDL flashing kit (NOT supplied by Ultraframe).

We have configured the placement of VELUX roof lights within our Ultraroof system for optimum aesthetics and performance.

VELUX are positioned relative to the tiles. An example of these position and applicable roof light options can be seen in the below illustration and accompanying table.

Vent options



The above illustration (and those overleaf) show indicative positions and vent options available at various projections on an example 25° roof. **Note:** If tapered box gutter above beam, vent position 2 is the first available option.

VENT POSITION	"A" - DISTANCE FROM BEAM TO APERTURE	"B" - MAXIMUM ALLOWABLE APERTURE	VENT OPTIONS
1	248	3652	CK01, CK02, CK04, CK06
2	785	3115	CK01, CK02, CK04, CK06
3	1322	2578	CK01, CK02, CK04, CK06
4	1859	2041	CK01, CK02, CK04, CK06
5	2396	1504	CK01, CK02, CK04, CK06
6	2933	967	CK01, CK02

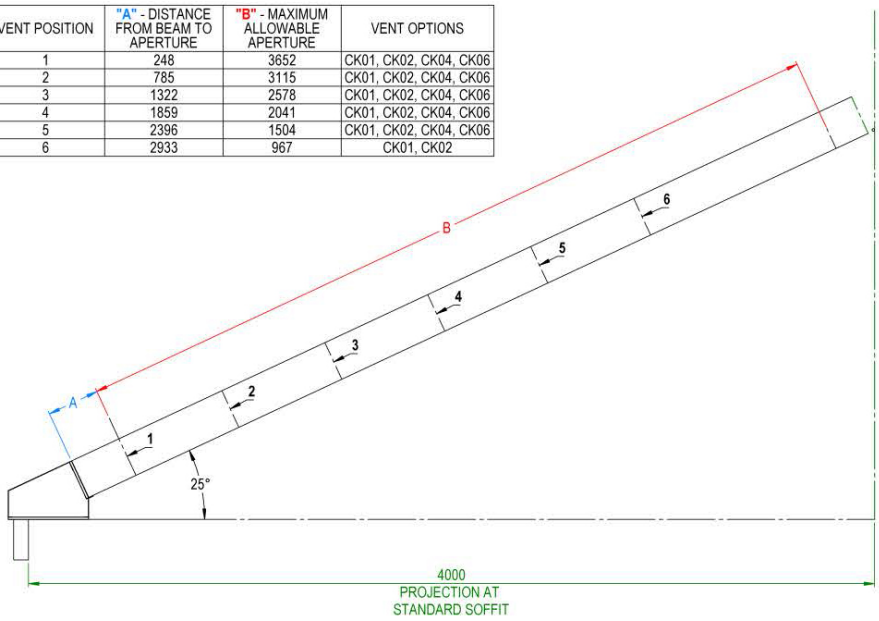

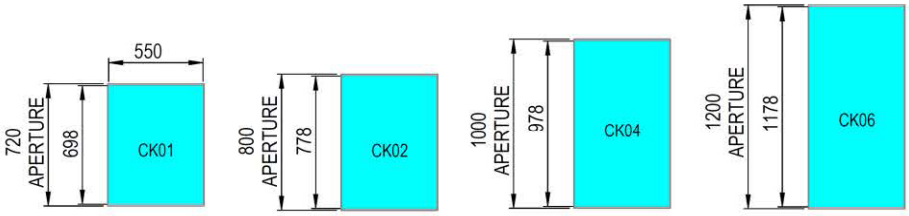

VELUX Positions and Installation

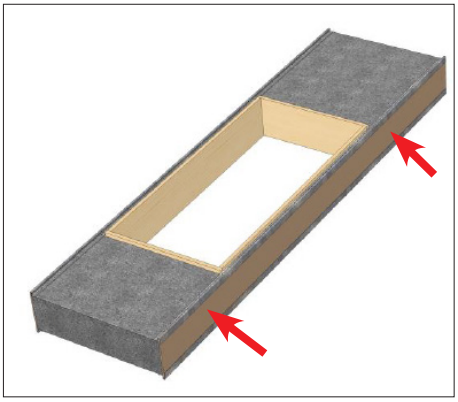

The new VELUX panel is constructed in the same way as a standard panel. **The panel will have a location label on the side and with a letter T for Top and B for Bottom.** Please ensure this is installed the correct way round otherwise the hole position will be in the wrong place.

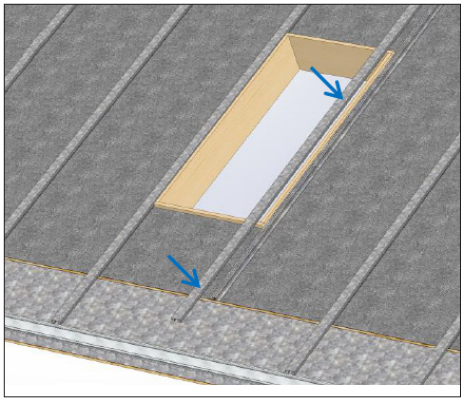

Ensuring that the VELUX panel is correctly positioned and square, fully install the adjacent panels, including internal and external clips, to fix the VELUX in position.

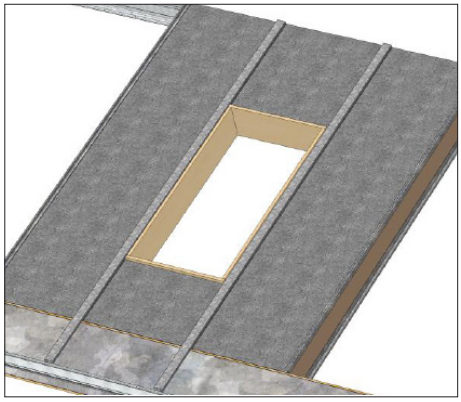

As previously described, fit the external panel clips followed by the internal clips. **Note: full clips should be fitted adjacent to VELUX as per standard panel.**

VELUX Positions and Installation

Ultraroof®
By Ultraframe

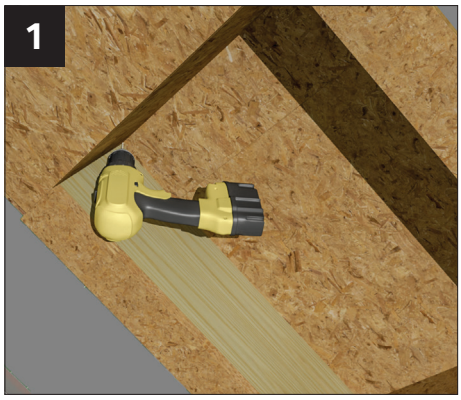

After fitting the OSB external panels, drill marking holes from the inside of the roof. NOTE: ensure that the panels above & below the Velux opening are in the correct position see previous page.



Using the marking holes as a guide, cut out the aperture for the VELUX frame



Test fit the VELUX frame with the brackets fitted. Remove material required to allow the brackets to sit flush on the OSB surface. **Note:** brackets should be fitted to top & bottom of VELUX frame NOT left & right.



Fit the frame



Fix frame to OSB

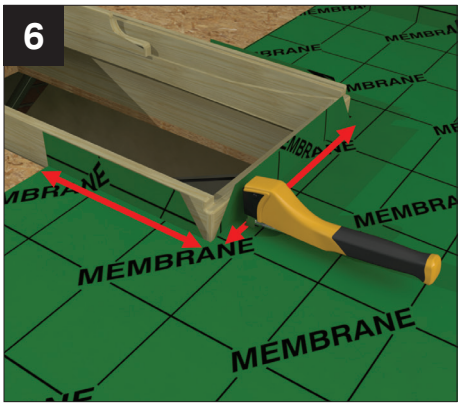

Continue fitting the membrane allowing it to extend up the sides of the frame as shown. Apply waterproof tape to seal corner of the membrane as shown.



Lay upper membrane section and cut to fit around aperture

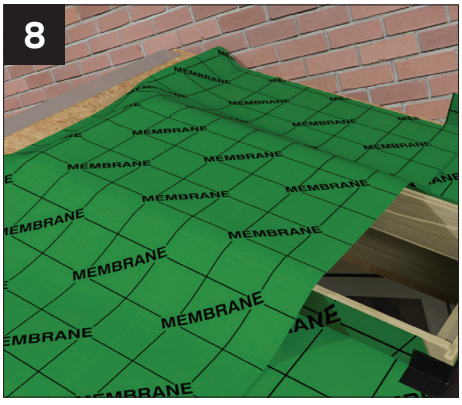

After fitting the OSB external panels, drill marking holes from the inside of the roof

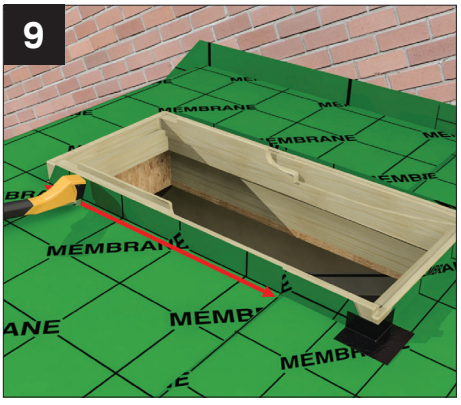

Ensure membrane is fitted neatly against the aperture and staple in position and trim

VELUX Positions and Installation

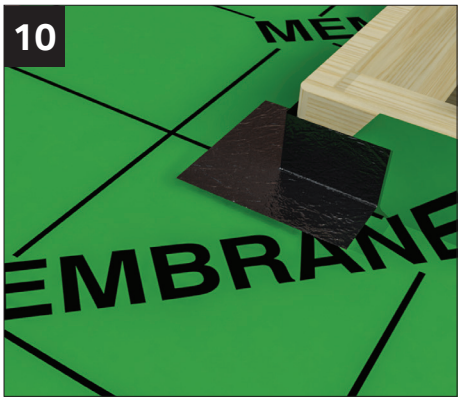

Seal upper corners with tape

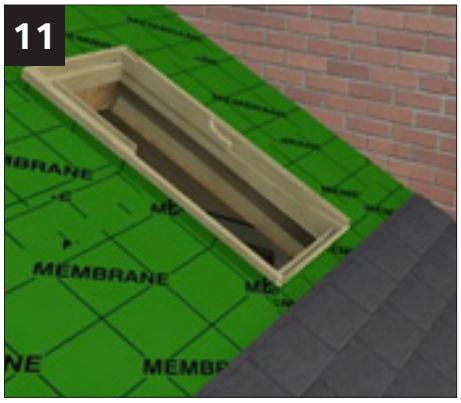

Install tiles up to the underside of the VELUX opening - refer to main guide to ensure correct tile spacing

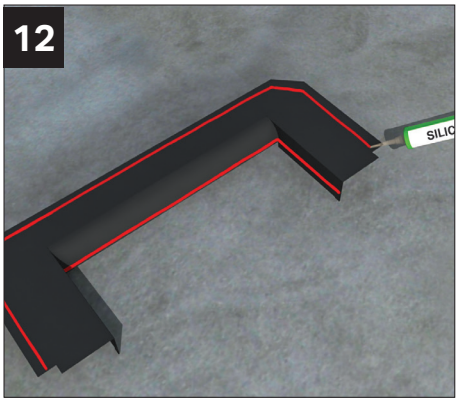

Apply low modulus neutral cure silicone to the underside of the flashings. Lower panel shown

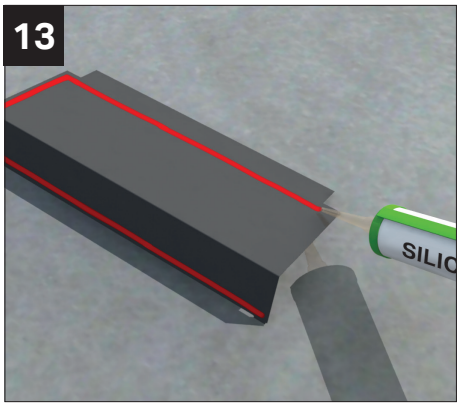

Apply low modulus neutral cure silicone to the underside of the flashings. Side panel shown

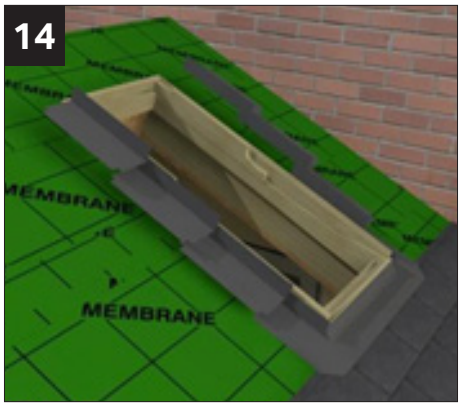

Fit the lower flashing panel, allowing it to overlap the tiles below as shown, followed by the overlapping side flashings. **Note:** How each side flashing always overlaps the flashing below

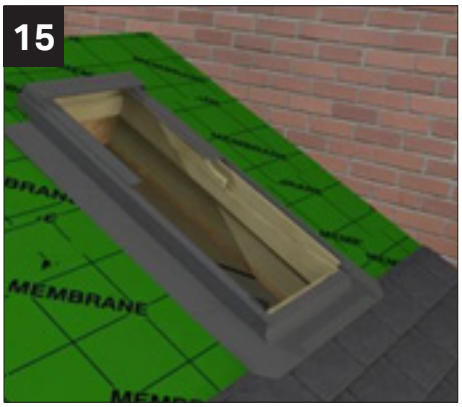

Fit VELUX frame flashings before adding the top flashing panel

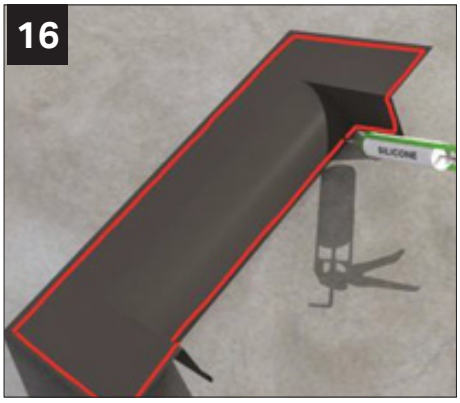

Applylow modulus neutral cure silicone to the underside of the upper flashing panel

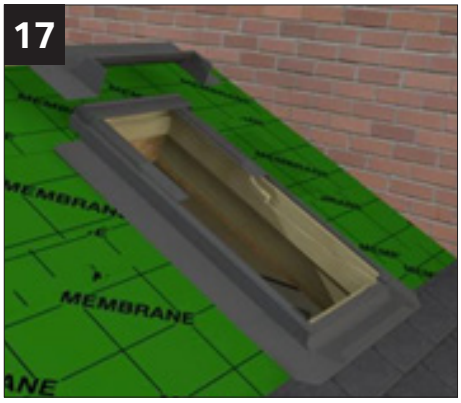

Fit the upper flashing panel

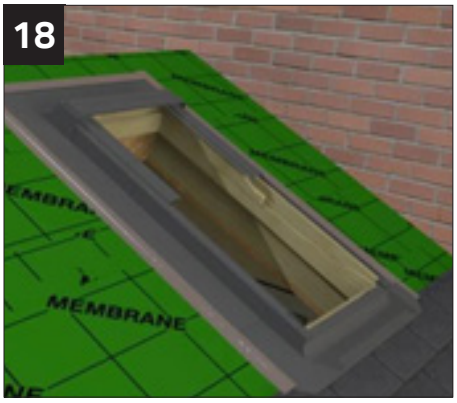

Apply the supplied aluminium backed butyl tape – this should overlap the lower tiles by approx 20mm. Fit the sides first followed by the top to ensure a good seal

VELUX Positions and Installation

19

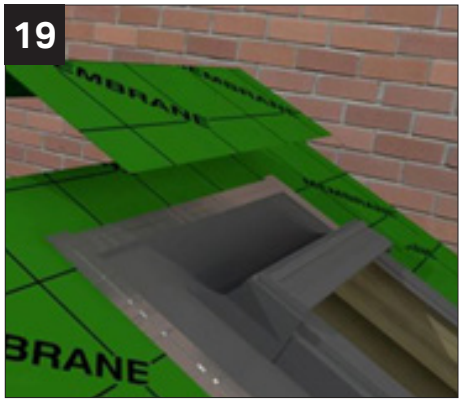

Apply a full width of membrane above the VELUX so that it overlaps the upper flashing panel. This should extend over the ridge, or up the host wall in the case of a lean-to

20



Tape the membrane using waterproof tape at both sides to secure

21

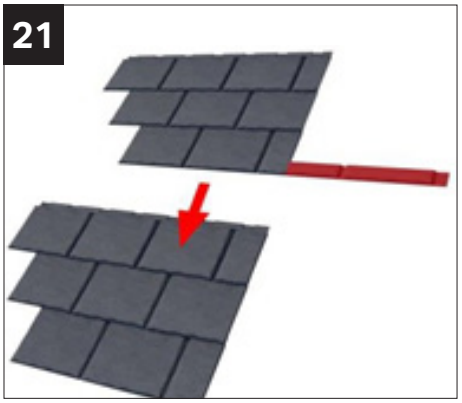

Due to our automated cutting system, tile sheets adjacent to the VELUX on the next row will have a narrow lower section still attached (see image). **Note:** This should be removed prior to fitting

22

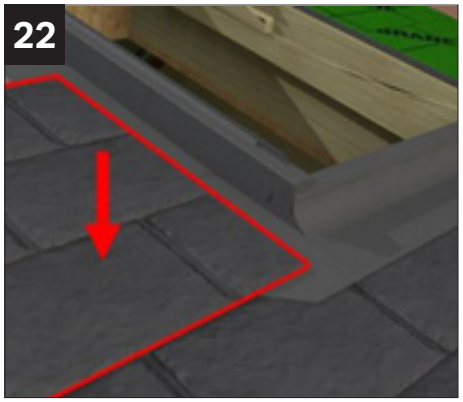

Image shows adjacent tiles fitted, highlighting the trimmed portion. Remember the lower flashing rides over the roof tiles

23

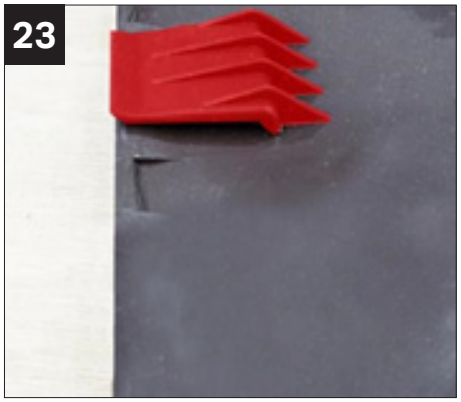

It may be necessary to remove tile clips from adjacent tiles which rest on the side flashings to allow them to lay correctly

24



Use tile screws to secure the bottom corners of the 2 adjacent tiles

25



Fit the remainder of the tiles – these should be approx 50mm from the sides of the VELUX frame. Remember tiles above and to each side of the VELUX, ride over the side flashings

26



Prior to fitting the VELUX trims ensure to seal between the tiles and the flashing, then fit the VELUX trims. The side rails consist of x 2 overlapping sections to allow for varying height of VELUX. Fit using supplied stainless steel screws with cover caps.

NRVFK001MGR VELUX TILE FRAME		1 PER VELUX ROOF LIGHT



Stainless steel
Screws + screw caps

VELUX Installation for SK MK PK FK options

1a

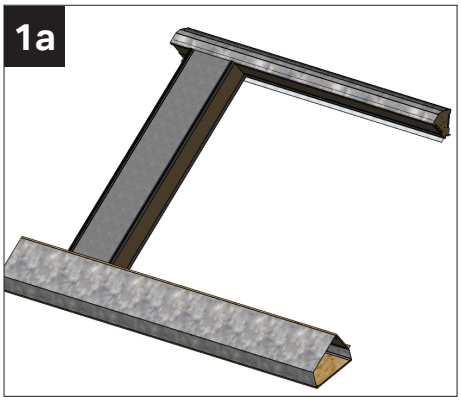

1b

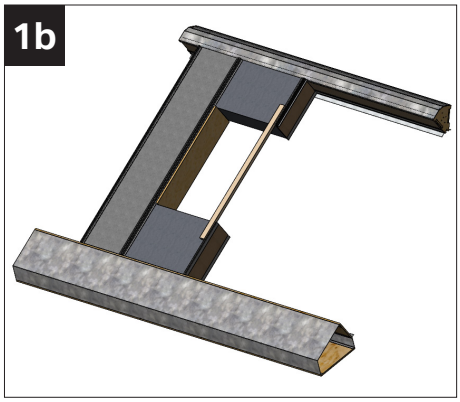

1c

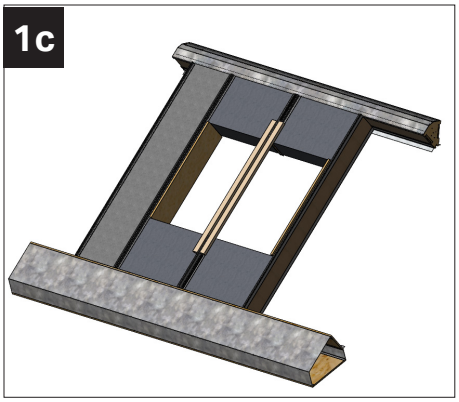

Installing panels - Install standard panels and half VELUX panels in order. Avoid handling the VELUX panels by the timber batten. Orientate the label top and bottom panels correctly.

1d

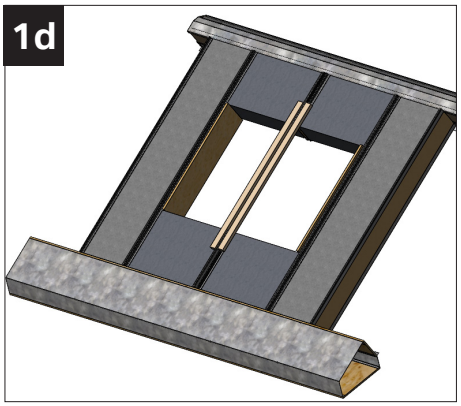

2a

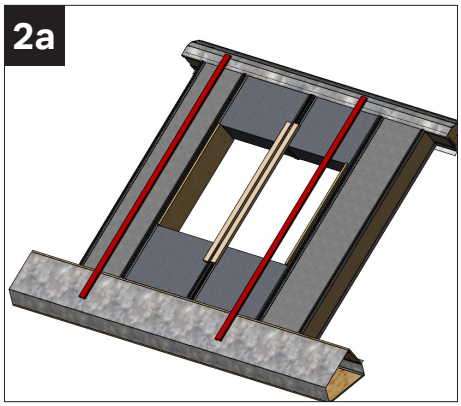

2a

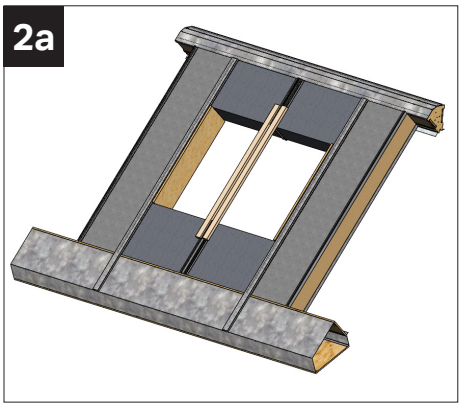

Clips- Fit the indicated full clips on the side rails of the VELUX .

2b

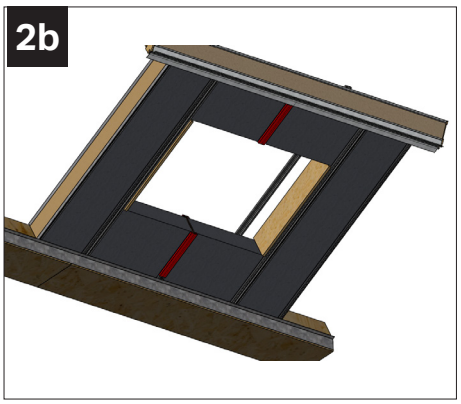

Clips - On the underside of the velux. Fit the indicated full clips on the central rails of the VELUX.

3a

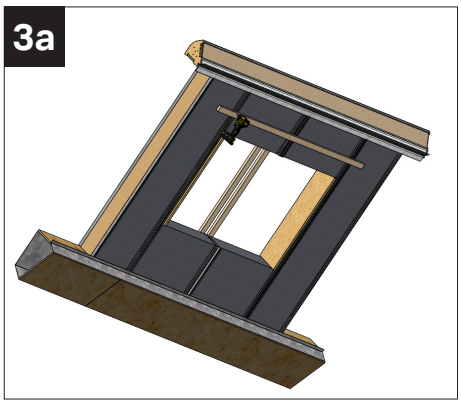

Temporary cross brace - Fix the 25x44mm across the underside of the TOP half of the VELUX panels.

3b

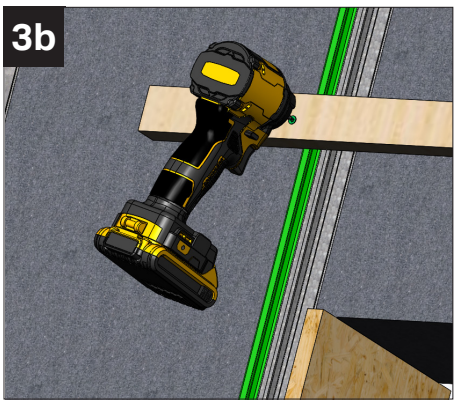

Fix twice using FSW-55-70/10 into the steel rail of the panel outside of the VELUX (fix twice per rail).

VELUX Installation for SK MK PK FK options

Ultraroof By Ultraframe

4

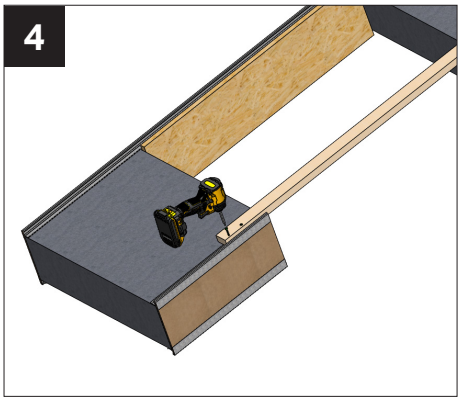

Unscrew transport bracing - Unscrew the fixings on both sides of the timber batten.

5

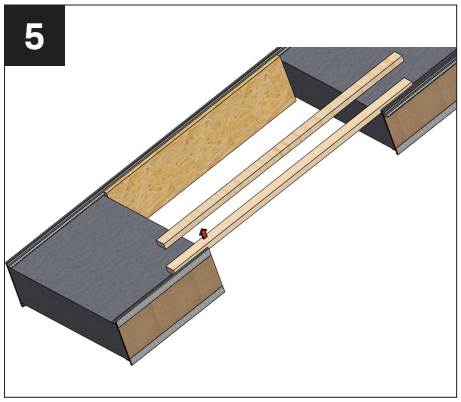

Remove batten

6a

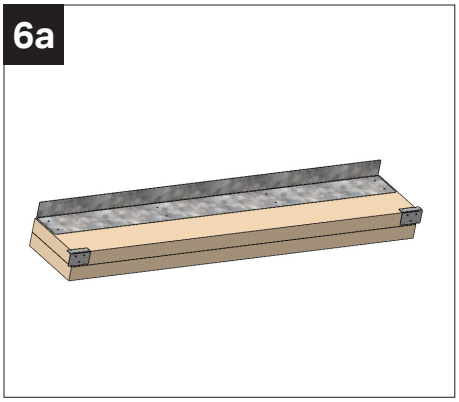

Trimmer panels - Trimmer panels vary on velux choice. The upper trimmer panels are either doubled up (MK or SK VELUX options).

6b

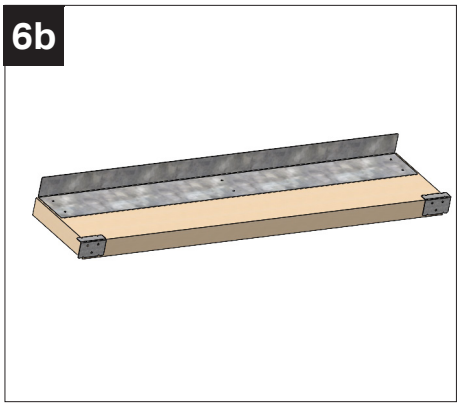

7a

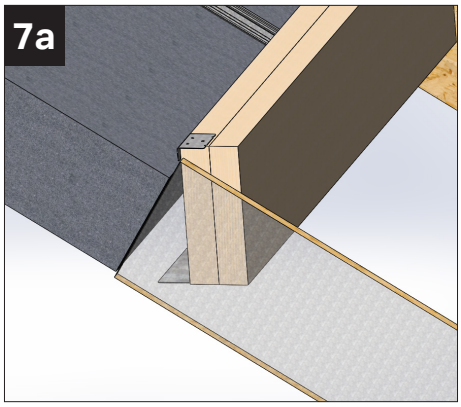

Hook trimmer panel over OSB - Hook the brackets of the trimmer panel over the OSB and rotate so that the panel sits square.

7b

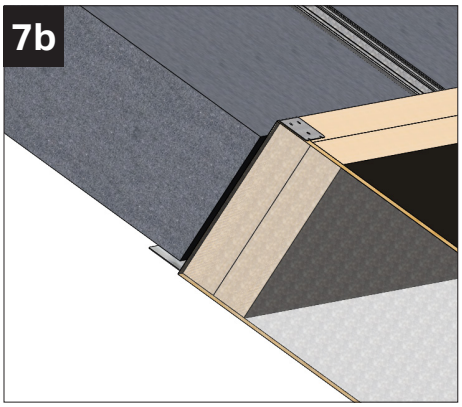

Timber and OSB should sit flush against each other.

8

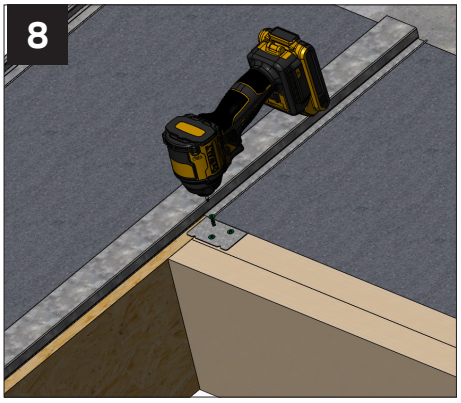

Fixing top bracket - Fix into the top bracket using GPHS050

9a

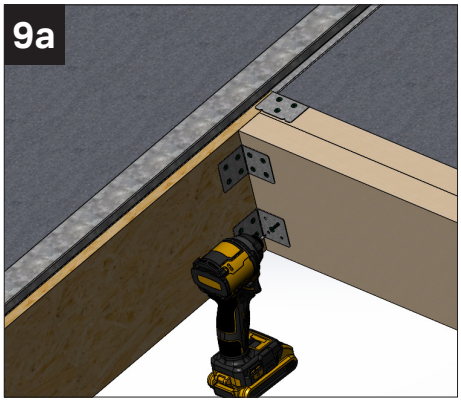

Fit the corner brackets in - Bend the flat steel M-18081 to form a 90 degree bracket and fix to OSB and trimmer using GPHS050.

9b

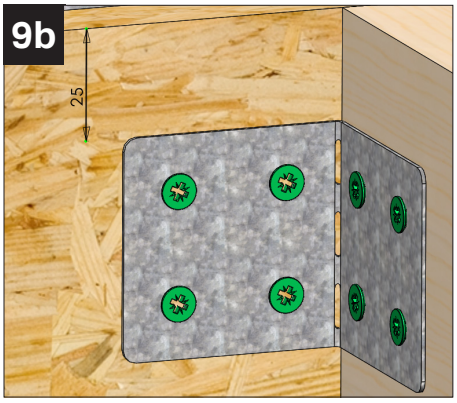

Corner bracket positioning - Brackets should be in 25mm from the edges.

VELUX Installation for SK MK PK FK options

10

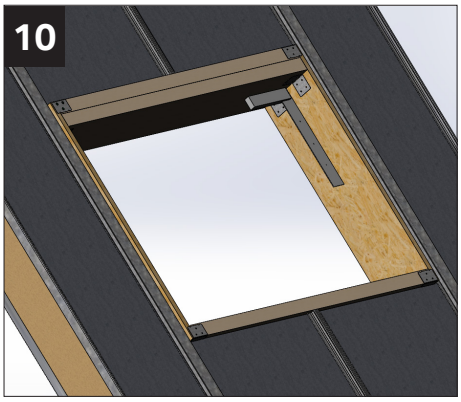

Install lower trimmer panel - Repeat for the lower panel and insure VELUX is square.

11

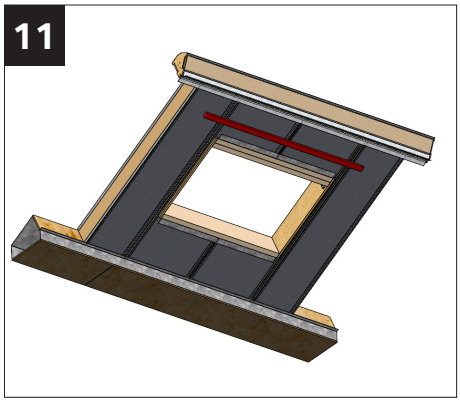

Remove temporary cross brace - Unscrew and remove underside batten.

12

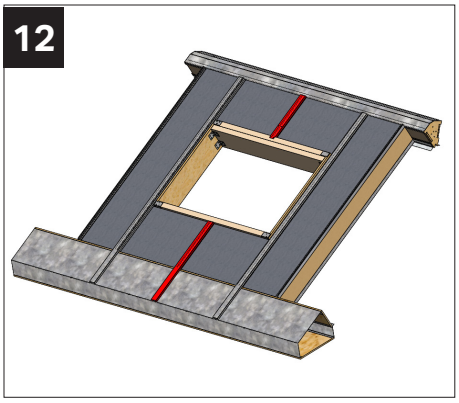

VELUX clips panel clips - Position in central velux full clips.

13

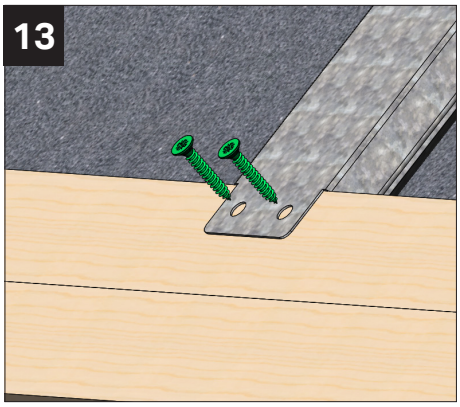

Fix the full clips tab- Fix the full clips tab into the trimmer panels using GPHS050

Ultraroof®
By Ultraframe

Ultraframe
Transforming light and space

Job No.: 3679 07/26 V2 NRVG001
It is Ultraframe's policy to continually seek to improve its products, processes and services, and we reserve the right to change specifications without prior notice. Ultraframe is a trading name of Ultraframe (UK) Limited.